PATTERN MAKER'S DIMENSIONS
Cast Iron Top Deck with Outside Lip v1.4

Dwg. KG4.4.12.24

Model KG4 B
Version 1.21
15 Dec 2017

C Pemberton-Pigott

This top deck has a lip and is bolted to the angle iron.

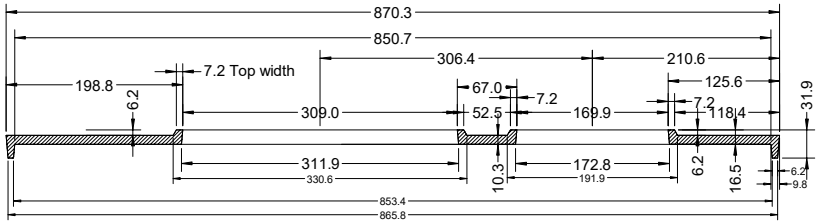

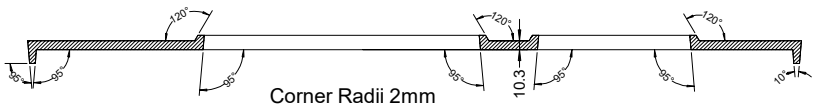

Section through the centreline

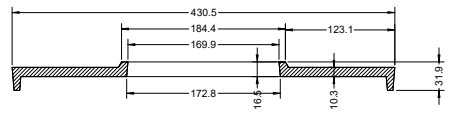

Section through the hopper entrance

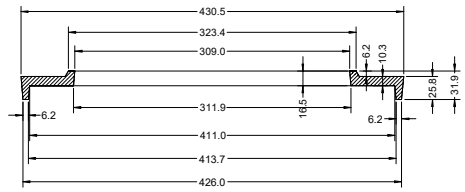

Section through the cooking hole

Top View

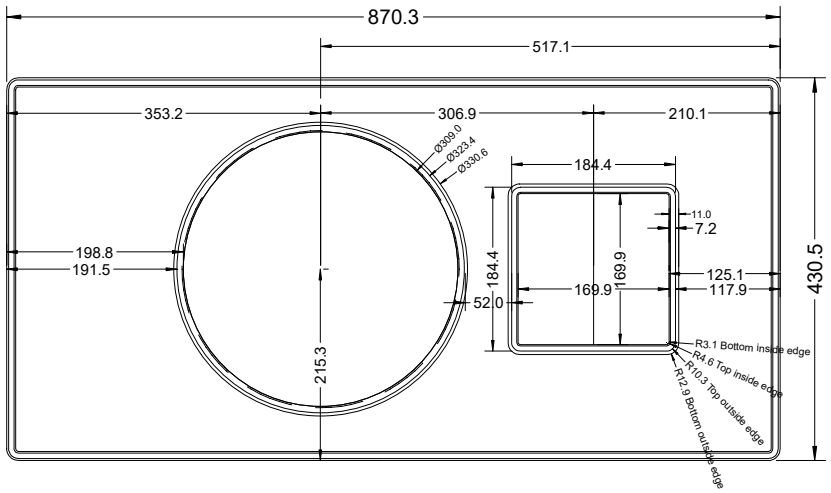
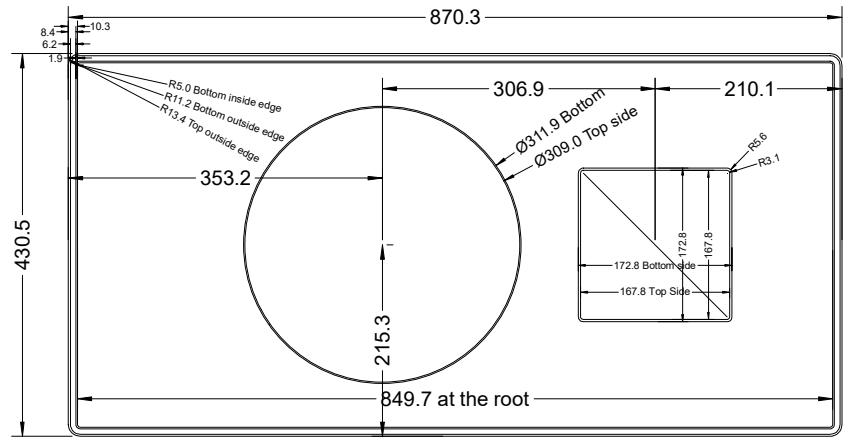
Bottom View